Installation Tool

INSTALLATION TOOL FOR STRAIGHT RAIL POSTS:

Note: *After installing the posts, before installing the post cap and post base trim, use the installation tool, as you need to measure it flush with the top of the post without the cap - once your holes have been marked, then you can install the post cap.*

1. Slide tool down on to post until the lip is flush with top of post.

- For a 42” high railing used on 44’’ post, use holes marked – **TOP 42"**
- For a 36” high railing used on 39 3/4’’, use holes marked – **TOP 36"**

A. Mark the location of these holes using a pencil.

B. Flip the tool over and slide to the bottom of the post. Ensure the 2 legs are sitting on the plate and the tool is flush with the post. Using a pencil, mark the hole marked – **BOTTOM**

C. Remove tool. Using either self-tapping screws (included in the kit) or a small drill bit (smaller than the self-tappers) drill the marks you have made on the post.

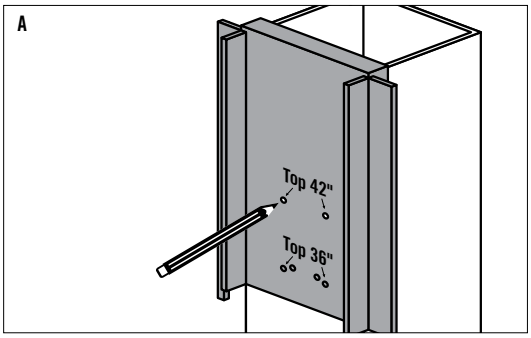

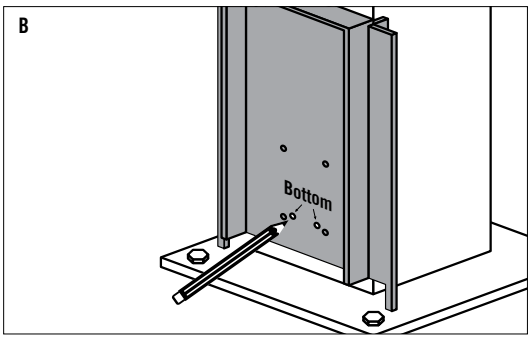

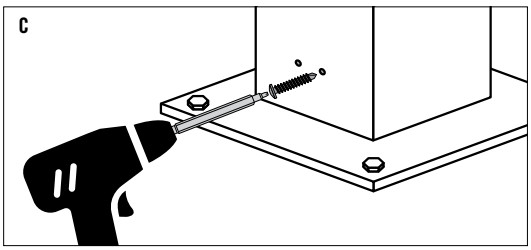

Post Top

Post Bottom